NOTES:

1. MATERIAL: HEAVY GAUGE WELDED STEEL FRAME
2. STANDARD FINISH: TELCO GRAY POWDER COAT (OTHER COLORS AVAILABLE)
3. TELCORDIA GR-63-CORE TESTED FOR SEISMIC ZONE 4 QUALIFICATION (HEIGHTS 84" AND UNDER ARE QUALIFIED UNDER CERTIFICATION).
4. TAPPED MOUNTING HOLES PROVIDED IN FRONT AND REAR FLANGES.
5. LOAD RATING: 925 LBS IN ZONE 4 SEISMIC AREAS (INCLUDES 50 LBS OF OVERHEAD CABLE).
6. HEIGHTS UNDER AND ABOVE THE LISTED HEIGHTS IN TABLE 1 ARE ALSO AVAILABLE. PLEASE CONSULT WITH SALES.

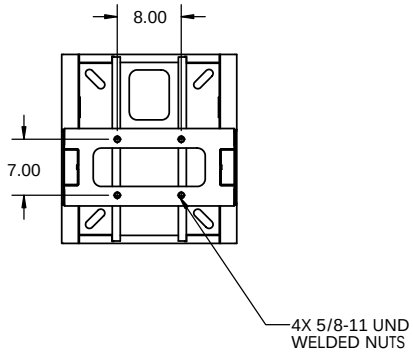

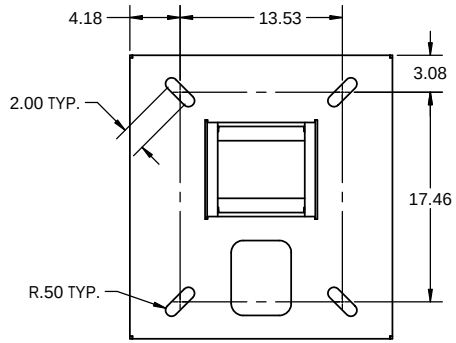

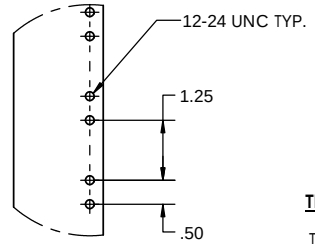

DETAIL B
SCALE 1 : 2

TITAN RACKS PART NUMBER LEGEND

TTN A 60 084 A A

A	TELCO GRAY
B	BLACK
C	BLUE
D	WHITE
E	CREAM
F	KONE GRAY

A	EIA HOLE SPACING
M	METRIC

072	6'
084	7'
083	***2100 MM***
087	***2200 MM***

30	300 MM DEEP BASE
45	450 MM DEEP BASE
60	600 MM DEEP BASE
75	750 MM DEEP BASE

A	19" PANEL MOUNTING
B	23" PANEL MOUNTING
E	600 MM PANEL MOUNTING

TTN	TITAN RACK

BOLD FOR METRIC ETSI RACKS ONLY

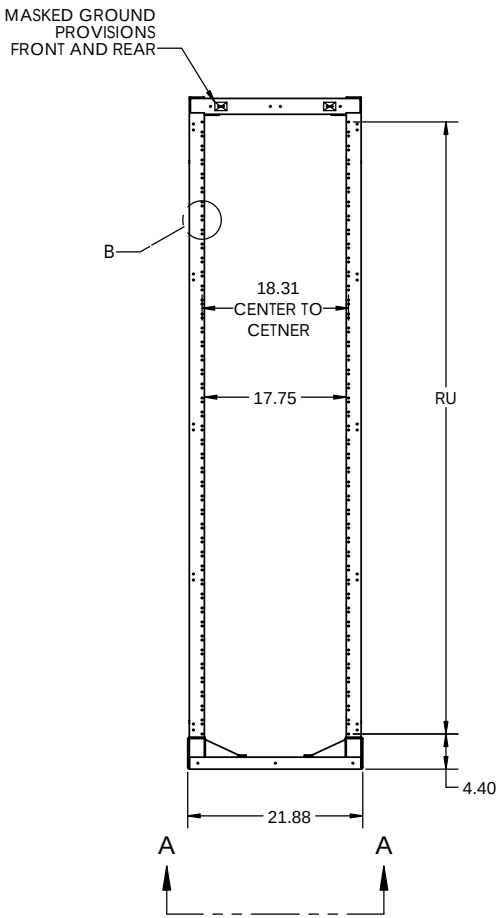

SECTION A-A
SCALE 1 : 8

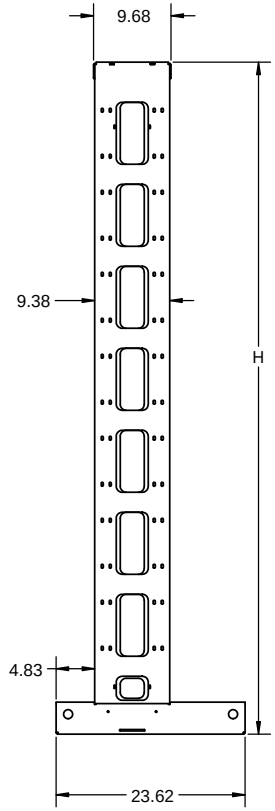

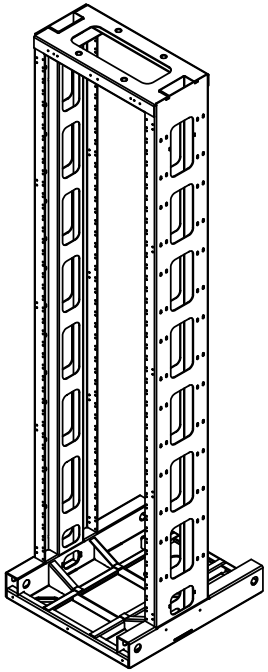

CONFIGURATONS TABLE			
PART NUMBER	HEIGHT (H)	RACK UNITS (RU) EIA WIDE	WEIGHT LBS.
TTNA60072Ax	72.00 IN.	37	148
TTNA60084Ax	84.00 IN.	44	161

**LAST DIGIT (X) OF THE ABOVE PART NUMBER REPRESENTS COLOR. SEE PART NUMBER LEGEND TO COMPLETE PART NUMBER.

PROPRIETARY AND CONFIDENTIAL

THE INFORMATION CONTAINED IN THIS DRAWING IS THE SOLE PROPERTY OF **ELECTRONIC SYSTEMS SUPPORT**. ANY REPRODUCTION IN PART OR AS A WHOLE WITHOUT THE WRITTEN PERMISSION OF **ELECTRONIC SYSTMES SUPPORT** IS PROHIBITED.

Electronic Systems Support
www.ess.to

3233 W. Kingsley Rd.
Garland, Texas 75041
PH. 972-272-2468
FAX 972-276-9844

	NAME	DATE
DRAWN	RNA	11-09-15
ENG APPR.		

UNLESS OTHERWISE SPECIFIED: DIMENSIONS ARE IN INCHES

PROJECTION:

TITLE: TITAN RACK, 19", 600MM BASE, EIA MTG.

SIZE: C | DWG. NO.: TTNA60xxxAx-SPEC | REV: A

SCALE: 1:12 | SHEET 1 OF 1